13456

SPECIFICATIONS:

(SPECIFICATIONS AT 25°C AND NOMINAL VOLTAGE UNLESS OTHERWISE NOTED.)

MECHANICAL:
- WETTED MATERIALS: 304 st/st
- WEIGHT: 2.5 LBS. (1.1kg)
- ENCLOSURE: DIE CAST ALUMINUM (MAX 0.67% COPPER); EPOXY POWDER COATED

ELECTRICAL:
- ELECTRICAL CONNECTION: TERMINAL BLOCK, 20 TO 14 AWG
- POWER SOURCE: 24 VDC NOMINAL; 18 TO 30 VDC, 100 mA MAX. (SURGE PROTECTED).
- SWITCHED OUTPUT: 100mA @ 5 TO 30 VDC, MOSFET, OPEN DRAIN OUTPUT, SHORT CIRCUIT PROTECTED.
- IAW OUTPUT: 100mA @ 5 TO 30 VDC, MOSFET, OPEN DRAIN OUTPUT, SHORT CIRCUIT PROTECTED.

OPERATING:
- SET POINT REPEATABILITY: ±0.2% OF MAX. RANGE VALUE
- LONG TERM STABILITY: ±0.25% OF RANGE PER YEAR, MAX.

GENERAL FEATURES:
- AMBIENT TEMPERATURE: OPERATING: -22°F TO 158°F (-30°C TO 70°C)
  STORAGE: -22°F TO 176°F (-30°C TO 80°C)
- MEDIA TEMPERATURE: -50°F TO 450°F (-45°C TO 232°C)
- APPROVALS:
  - UL, cUL LISTED
  - CLASS I, DIVISION 2, GROUPS A, B, C, D.
  - CLASS II, DIVISION 2, GROUPS F, G,
  - CLASS III;
  - ENCLOSURE TYPE 4X
  - CLASS I, ZONE 2, GRP. IIC T4
  - CE COMPLIANCE- EMC DIRECTIVE

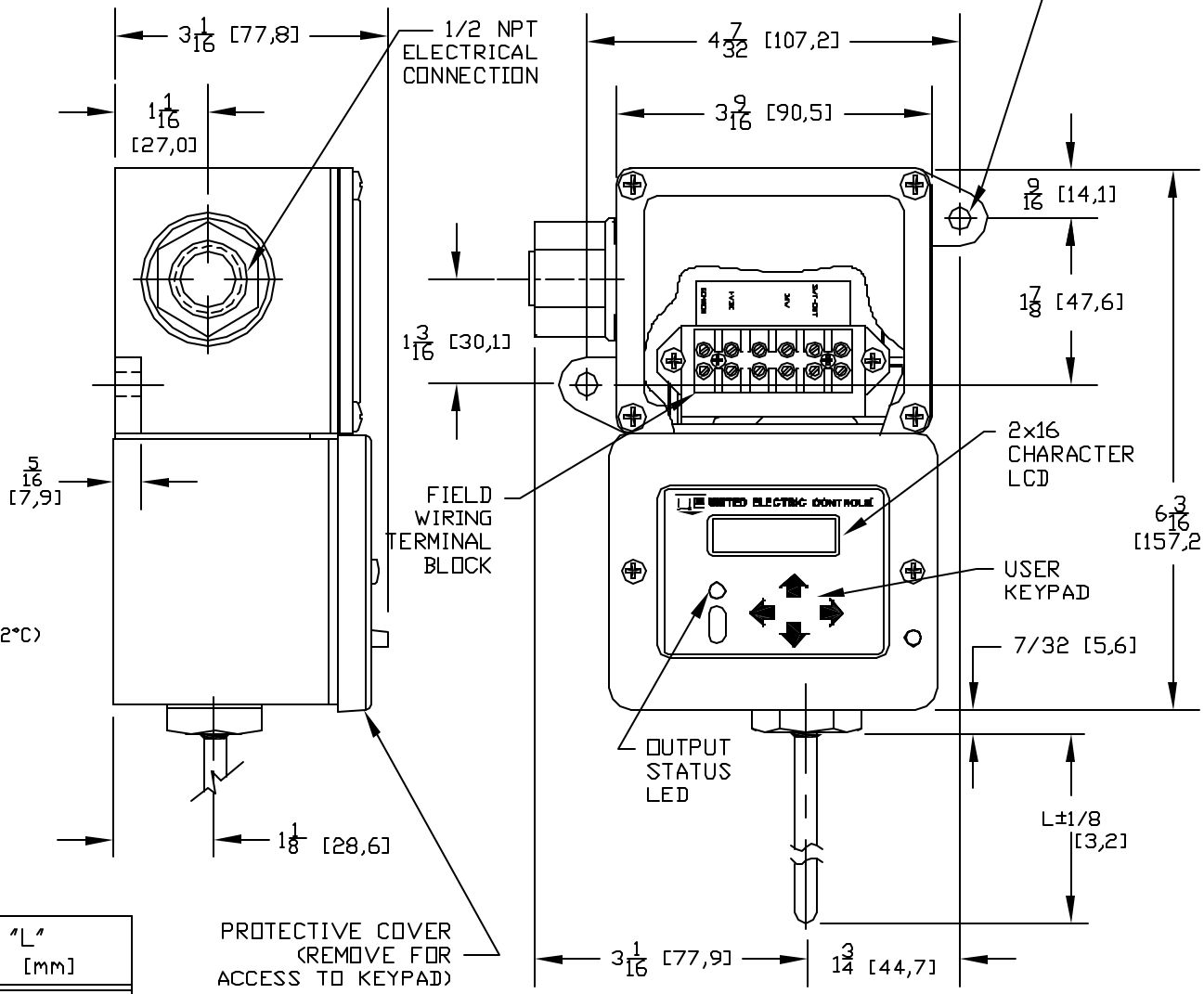

MODEL	DIM "L" in.	[mm]
L1	4	[102]
L2	6	[153]
L3	10	[254]

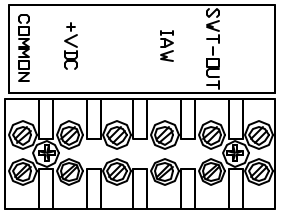

TERMINAL BLOCK

SYM	DESCRIPTION	DATE	DWN	APPD
A	FIRST ISSUE. ECN# C7742	11/2/98	PLW	D.L.

REVISIONS

ORIGINAL DATE	11/2/98
DRWN	PLW
CHKD	A.B.
APPD	D. LONIGRO

UNLESS OTHERWISE SPECIFIED DIMENSIONS ARE IN INCHES TOLERANCES ON FRACTIONS ±1/64 2 PLACE DEC 3 PLACE DEC ANGLES ±.010 ±.005 ±1/2°

DO NOT SCALE THIS DRAWING

TITLE

D1B2L__ ONE SERIES LOCAL TEMP. SWITCH

USED ON:

SCALE .5:1

UNITED ELECTRIC CONTROLS COMPANY
WATERTOWN * MASSACHUSETTS

DF001 REV. B

DWG NO A-13456