13741

SPECIFICATIONS:

(SPECIFICATIONS AT 25°C AND NOMINAL VOLTAGE UNLESS OTHERWISE NOTED.)

MECHANICAL:
- WETTED MATERIALS:
  - PROCESS CONNECTION - 316 st/st
- WEIGHT: 3.4 LBS. (1.5kg)
- ENCLOSURE: DIE CAST ALUMINUM; EPOXY POWDER COATED

ELECTRICAL:
- ELECTRICAL CONNECTION: TERMINAL BLOCKS, 20 TO 14 AWG
- POWER SOURCE: 230 VAC ±10% 20mA (EXCLUDING SSR LOAD CURRENT)
- SWITCHED OUTPUT: 5 A @ 70°C 230 VAC, SPST, SOLID-STATE RELAY
- IAW OUTPUT: 100mA UP TO 50 VDC, MOSFET, OPEN DRAIN (COLLECTOR) OUTPUT, SHORT CIRCUIT PROTECTED.

OPERATING:
- SET POINT REPEATABILITY: ±0.2% OF MAX. RANGE VALUE
- LONG TERM STABILITY: ±0.25% OF RANGE PER YEAR, MAX.

GENERAL FEATURES:
- AMBIENT TEMPERATURE: OPERATING: -22°F TO 158°F (-30°C TO 70°C)
  STORAGE: -22°F TO 176°F (-30°C TO 80°C)
- MEDIA TEMPERATURE: 0°F TO 257°F (-17°C TO 125°C)
- APPROVALS:
  - UL, cUL LISTED, FM APPROVED
  - CLASS 1, DIVISION 2, GROUPS A, B, C,D,
  - CLASS II, DIVISION 2, GROUPS F, G,
  - CLASS III; ENCLOSURE TYPE 4X
  - CLASS I, ZONE 2, GROUP IIC T4

MODEL	OPERATING RANGE LOW psi/bar	OPERATING RANGE HIGH psi	OPERATING RANGE HIGH bar	MAX. OVER PRESURE psi	MAX. OVER PRESURE bar	BURST PRESSURE psi	BURST PRESSURE bar
T1	0	25	1,72	50	3,45	100	6,89
T2	0	50	3,45	100	6,89	200	13,79
T3	0	125	8,62	250	17,24	500	34,47
T4	0	250	17,2	500	34,5	1000	68,9
T5	0	600	41,4	1400	96,5	2800	193,1

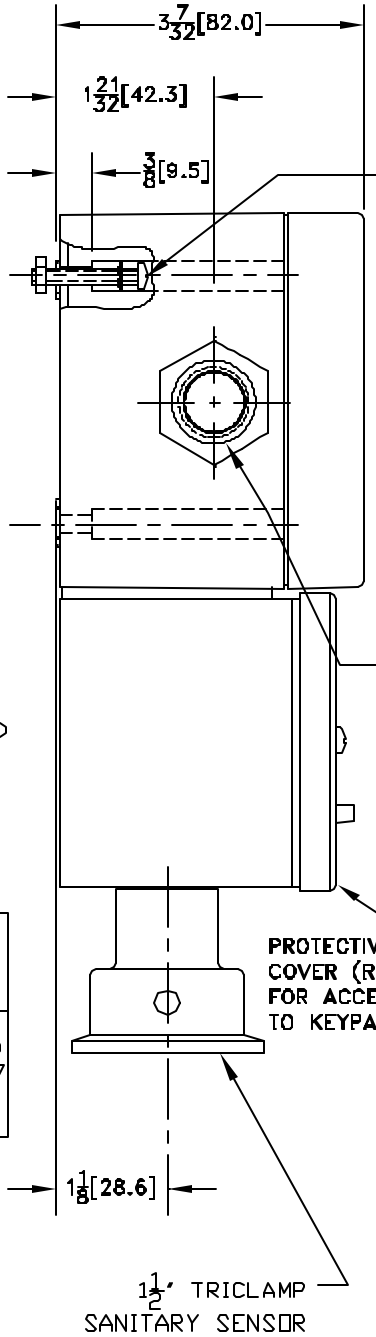

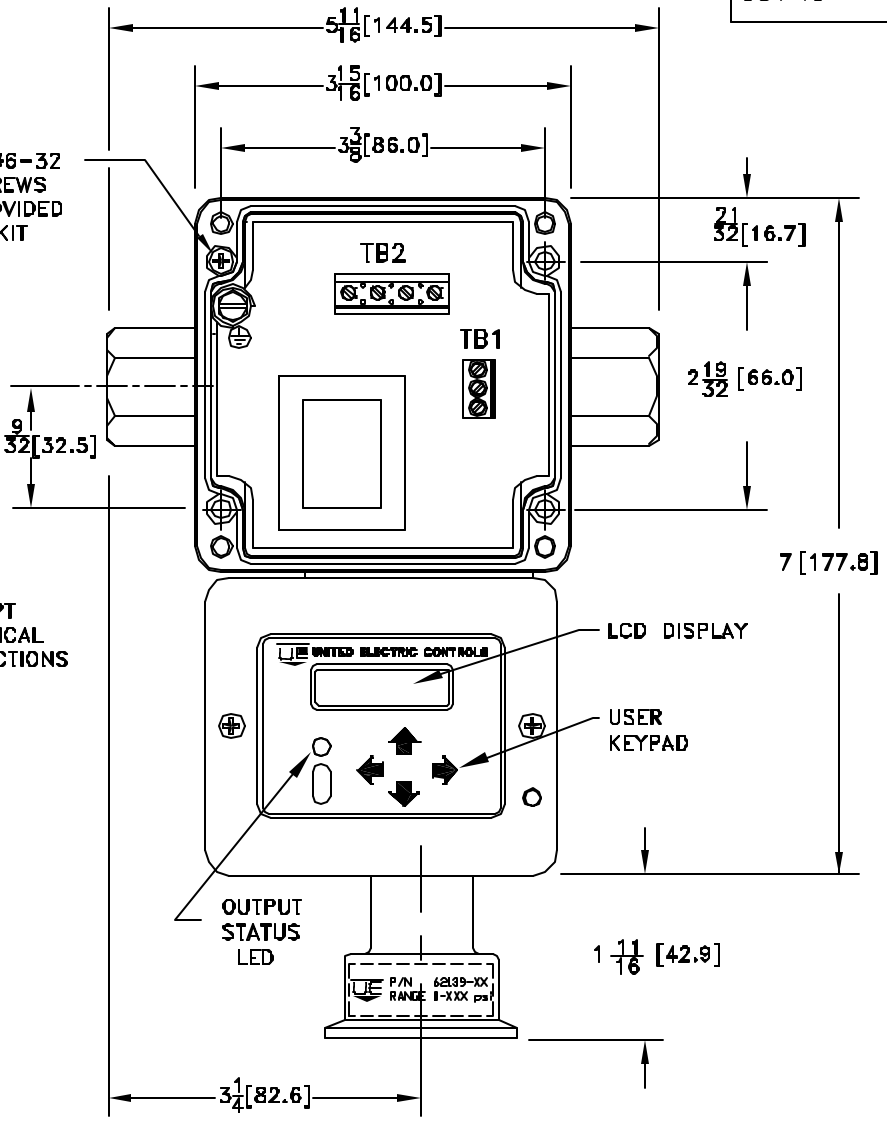

TOP COVER REMOVED IN FRONT VIEW

TERMINAL BLOCK CONNECTIONS

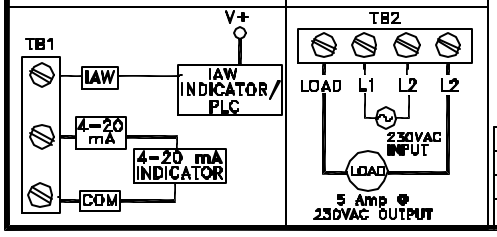

SYM	DESCRIPTION	DATE	DWN	APPD
B	ADDED FM APPROVAL. ECN# C9695	1/28/02	PLW	W.K.
A	FIRST ISSUE. ECN# C9209	3/12/01	PLW	D.L.

REVISIONS

ORIGINAL DATE	3/12/01
DRWN	PLW
CHKD	A.B.
APPD	D. LONIGRO

UNLESS OTHERWISE SPECIFIED DIMENSIONS ARE IN INCHES TOLERANCES ON FRACTIONS ±1/64 2 PLACE DEC ±.010 3 PLACE DEC ±.005 ANGLES ±1/2°

DO NOT SCALE THIS DRAWING

TITLE
D1E5T__
ONE SERIES
230 VAC
SANITARY
PRESSURE
SWITCH

SCALE 0.5:1

DF001
REV. C

UNITED ELECTRIC CONTROLS COMPANY
WATERTOWN * MASSACHUSETTS

DWG NO
A-13741